Jetstream®

PARTS MANUAL

WEATHERFORD/ AMERICAN AERO WATERBLAST UNITS

© Jetstream of Houston, Inc.

REPAIR PARTS AND EQUIPMENT UPGRADES

The **Jetstream Improved™** repair parts in this manual are superior ***direct replacements*** for your worn Weatherford/American Aero parts. These parts are manufactured in our modern, in-house, computer controlled machining facility.

We offer **Same-Day Shipment** for any part you need from our well stocked warehouse . . .

Jetstream Extended Sales Hours

M - F - **7:00 am - 6:00 pm** (C.S.T.)

Saturday - **9:00 am - 12:00 pm** (C.S.T.)

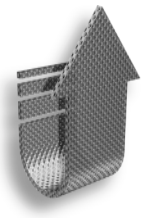

A **Jetstream Upgrade™** can be substituted for any Weatherford/American Aero component that is costly to repair or has become a maintenance problem.

The **Jetstream Upgrade™** shown opposite each Weatherford/American Aero component in this manual generally has **fewer parts** and **cartridge-style** repair features. It will give your equipment **better-than new performance** with less maintenance downtime and operating costs.

CONTENTS

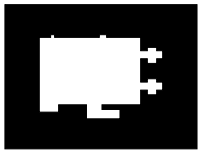

Fluid Ends ..... Page 4

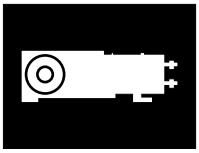

Power Ends ..... Page 12

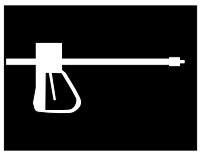

Control Gun ..... Page 16

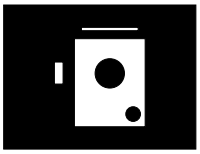

Saf-Trol E Control Unit ..... Page 17

Manual Dump Valve ..... Page 18

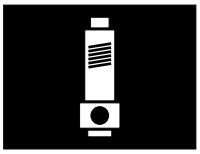

Snap Acting Relief Valve ..... Page 19

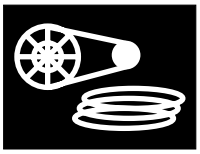

Pump Drives ..... Page 20

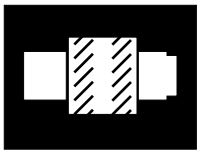

Quick Disconnect Coupling ..... Page 21

FE-85 TRIPLEX PUMP FLUID END

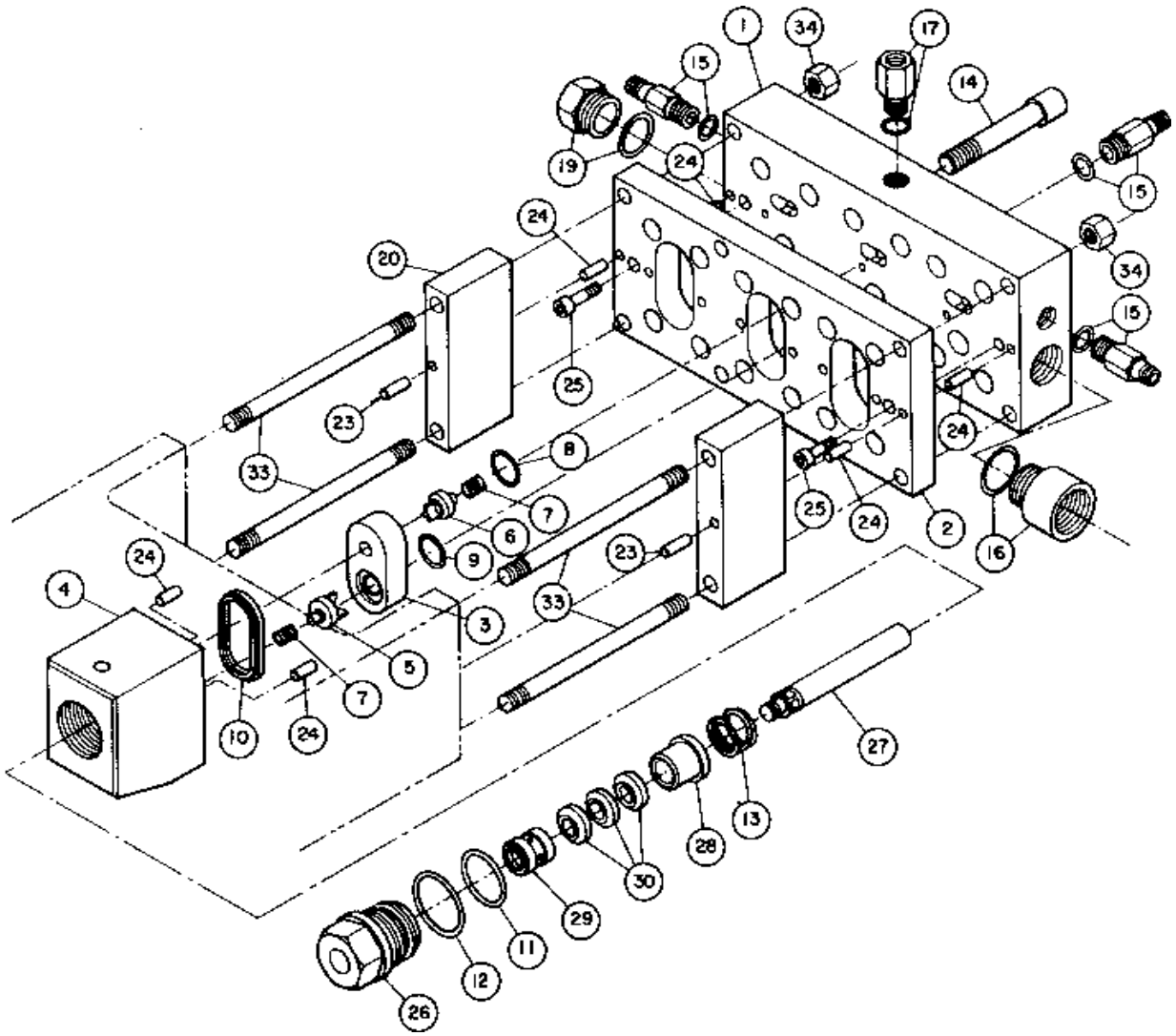

ITEM	QTY	JETSTREAM IMPROVED™ PART NO.	DESCRIPTION
1	1	50720	MANIFOLD
2	1	50721	PLATE, VALVE SEAT RETAINER
3	3	50669	CARTRIDGE, VALVE SEAT
4	3	50722	CYLINDER, FLUID, STAINLESS STEEL
5	3	50654	VALVE, SUCTION
6	3	50657	VALVE, DISCHARGE
7	6	25634	SPRING, VALVE
8	3	25638	O-RING, DISCHARGE VALVE SEAL
9	3	25637	O-RING, SUCTION VALVE SEAL
10	3	50645	SEAL ASSEMBLY, FLUID CYLINDER, ALUMINUM
		50344	SEAL ASSEMBLY, FLUID CYLINDER, STAINLESS STEEL
11	3	25562	O-RING, PACKING CARTRIDGE, POLY.
12	3	25563	O-RING, PACKING CARTRIDGE LUBE
13	3	25560	SPRING, PACKING
14	12	25701	CAPSCREW, SOC. HD.
15	3	50675	ADAPTER #12 STRAIGHT BOSS x 1/2” NPTM - WITH O-RING
	3	25670	O-RING, #12 STRAIGHT BOSS FITTING

ITEM	QTY	JETSTREAM IMPROVED™ PART NO.	DESCRIPTION
16	1	50697	ADAPTER, #24 STRAIGHT BOSS x 2” NPTF - WITHOUT O-RING
	1	25671	O-RING, #24 STRAIGHT BOSS FITTING
17	1	50674	ADAPTER, #8 STRAIGHT BOSS x 1/2” NPTF - WITHOUT O-RING
	1	25824	O-RING, #8 STRAIGHT BOSS FITTING
19	1	25704	PLUG, #24 STRAIGHT BOSS - WITHOUT O-RING
	1	25671	O-RING, #24 STRAIGHT BOSS FITTING
20	2	50723	PLATE, SPACER
23	2	25750	PIN, DOWEL
24	10	25705	PIN, DOWEL
25	2	25700	CAPSCREW, SOC. HD.
26	3	50536	CARTRIDGE, PACKING (FOR “A”, “B”, “C” PLUNGERS)
		50566	CARTRIDGE, PACKING (FOR “D”, “E” PLUNGERS)
27	3	50552	PLUNGER, “A” SIZE (13/16” DIA.) COLMONOY
		50535	PLUNGER, “B” SIZE (7/8” DIA.) COLMONOY
		50574	PLUNGER, “C” SIZE (15/16” DIA.) COLMONOY
		50549	PLUNGER, “D” SIZE (1-1/16” DIA.) COLMONOY
		50576	PLUNGER, “E” SIZE (1-3/16” DIA.) COLMONOY
28	3	50564	BUSHING, PACKING, FRONT, “A” SIZE
		50539	BUSHING, PACKING, FRONT, “B” SIZE
		50572	BUSHING, PACKING, FRONT, “C” SIZE
		50550	BUSHING, PACKING, FRONT, “D” SIZE
		50575	BUSHING, PACKING, FRONT, “E” SIZE
29	3	50563	BUSHING, PACKING, REAR, “A” SIZE
		50540	BUSHING, PACKING, REAR, “B” SIZE
		50571	BUSHING, PACKING, REAR, “C” SIZE
		50551	BUSHING, PACKING, REAR, “D” SIZE
		50573	BUSHING, PACKING, REAR, “E” SIZE
30	3	50565	PACKING SET, “A” SIZE, WATER LUBE
		50567	PACKING SET, “B” SIZE, WATER LUBE
		50568	PACKING SET, “C” SIZE, WATER LUBE
		50569	PACKING SET, “D” SIZE, WATER LUBE
		50570	PACKING SET, “E” SIZE, WATER LUBE
33	4	50724	STUD, MOUNTING
34	4	25706	NUT

If your FE-85 requires major repair, or to achieve pressures up to 40,000 psi

UPGRADE TO JETSTREAM’S UNx FLUID END

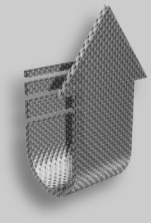

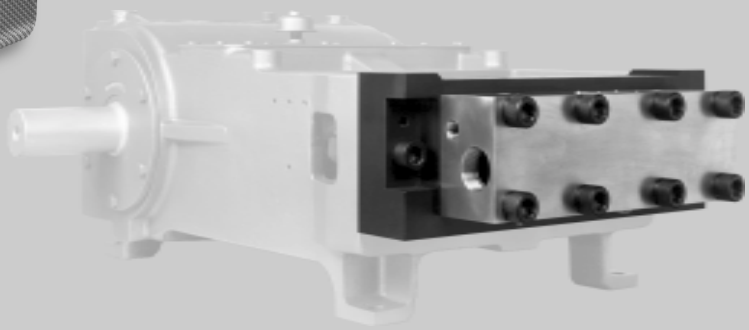

THE SIMPLE UNx

- 63% fewer parts than the FE-85
- One piece of brass
- One packing ring
- One valve
- No fluid cylinder to crack
- No racetrack seals to blow
- Cuts your pump’s downtime and repair costs
- No special tools needed
- Utilizes cartridge-style overhaul
- In-line valve design

FE-145 QUINTUPLEX PUMP FLUID END

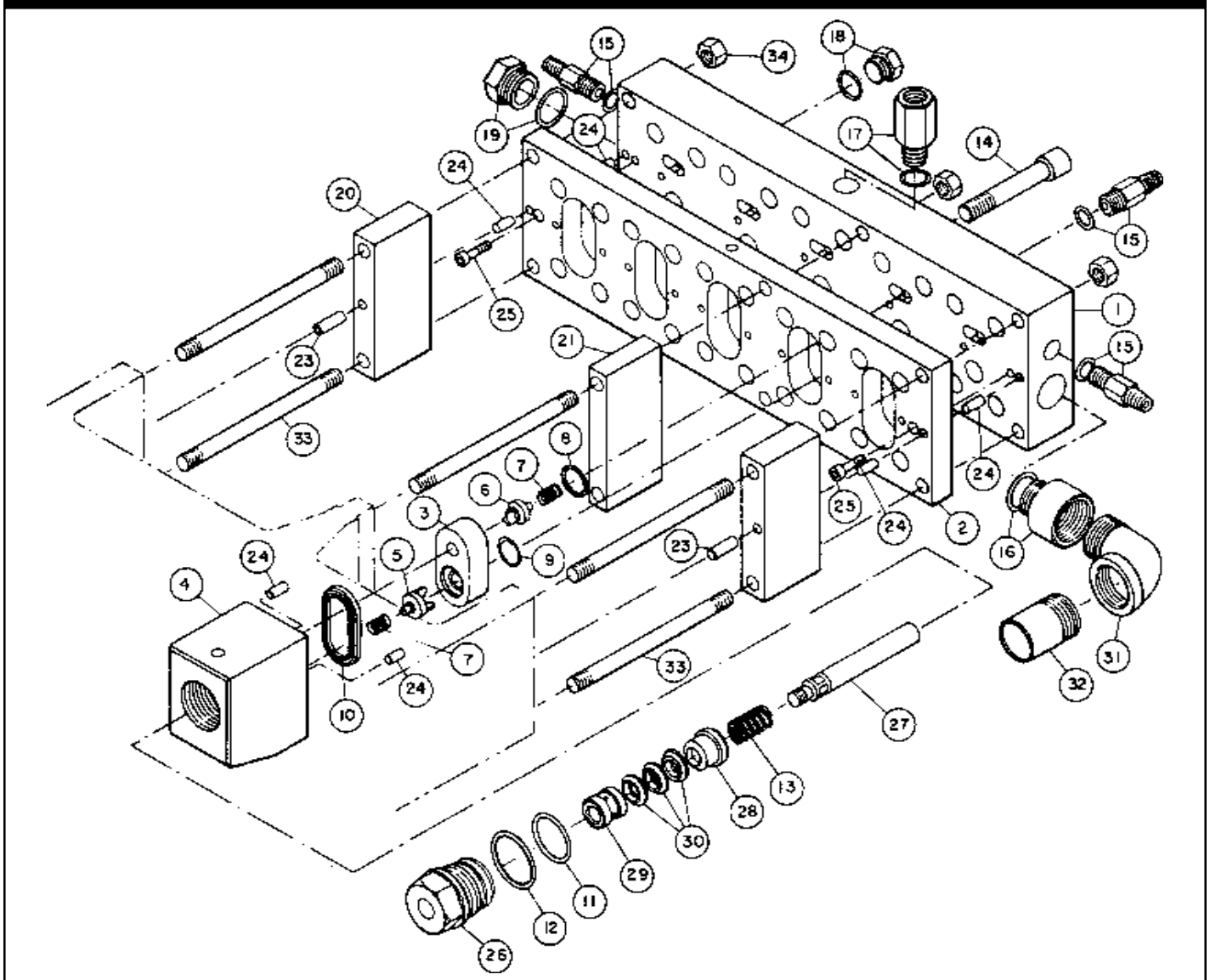

ITEM	QTY	JETSTREAM IMPROVED™ PART NO.	DESCRIPTION
1	1	50726	MANIFOLD
2	1	50746	PLATE, VALVE SEAT RETAINER
3	5	50669	CARTRIDGE, VALVE SEAT
4	5	50722	CYLINDER, FLUID, STAINLESS STEEL
5	5	50654	VALVE, SUCTION
6	5	50657	VALVE, DISCHARGE
7	10	25634	SPRING, VALVE
8	5	25638	O-RING, DISCHARGE VALVE SEAL
9	5	25637	O-RING, SUCTION VALVE SEAL
10	5	50645	SEAL ASSEMBLY, FLUID CYLINDER, ALUMINUM
		50344	SEAL ASSEMBLY, FLUID CYLINDER, STAINLESS STEEL
11	5	25562	O-RING, PACKING CARTRIDGE, POLY.
12	5	25563	O-RING, PACKING CARTRIDGE LUBE
13	5	25560	SPRING, PACKING
14	20	25701	CAPSCREW, SOC. HD.
15	3	50675	ADAPTER #12 STRAIGHT BOSS x 1/2” NPTM - WITH O-RING
	3	25670	O-RING, #12 STRAIGHT BOSS FITTING

ITEM	QTY	JETSTREAM IMPROVED™ PART NO.	DESCRIPTION
16	1	50697	ADAPTER, #24 STRAIGHT BOSS x 2” NPTF - WITHOUT O-RING
	1	25671	O-RING, #24 STRAIGHT BOSS FITTING
17	1	50674	ADAPTER, #8 STRAIGHT BOSS x 1/2” NPTF - WITHOUT O-RING
	1	25824	O-RING, #8 STRAIGHT BOSS FITTING
18	1	25702	PLUG, #12 STRAIGHT BOSS - WITH O-RING
	1	25670	O-RING, #12 STRAIGHT BOSS FITTING
19	1	25704	PLUG, #24 STRAIGHT BOSS - WITHOUT O-RING
	1	25671	O-RING, #24 STRAIGHT BOSS FITTING
20	2	50750	PLATE, SPACER, OUTSIDE
21	1	50749	PLATE, SPACER, CENTER
23	2	25750	PIN, DOWEL
24	14	25705	PIN, DOWEL
25	2	25700	CAPSCREW, SOC. HD.
26	5	50536	CARTRIDGE, PACKING (FOR “A”, “B”, “C” PLUNGERS)
	5	50566	CARTRIDGE, PACKING (FOR “D”, “E” PLUNGERS)
27	5	50552	PLUNGER, “A” SIZE (13/16” DIA.) COLMONOY
		50535	PLUNGER, “B” SIZE (7/8” DIA.) COLMONOY
		50574	PLUNGER, “C” SIZE (15/16” DIA.) COLMONOY
		50549	PLUNGER, “D” SIZE (1-1/16” DIA.) COLMONOY
		50576	PLUNGER, “E” SIZE (1-3/16” DIA.) COLMONOY
28	5	50564	BUSHING, PACKING, FRONT, “A” SIZE
		50539	BUSHING, PACKING, FRONT, “B” SIZE
		50572	BUSHING, PACKING, FRONT, “C” SIZE
		50550	BUSHING, PACKING, FRONT, “D” SIZE
		50575	BUSHING, PACKING, FRONT, “E” SIZE
29	5	50563	BUSHING, PACKING, REAR, “A” SIZE
		50540	BUSHING, PACKING, REAR, “B” SIZE
		50571	BUSHING, PACKING, REAR, “C” SIZE
		50551	BUSHING, PACKING, REAR, “D” SIZE
		50573	BUSHING, PACKING, REAR, “E” SIZE
30	5	50565	PACKING SET, “A” SIZE, WATER LUBE
		50567	PACKING SET, “B” SIZE, WATER LUBE
		50568	PACKING SET, “C” SIZE, WATER LUBE
		50569	PACKING SET, “D” SIZE, WATER LUBE
		50570	PACKING SET, “E” SIZE, WATER LUBE
31	1	25050	ELBOW, STREET, 2”
32	1	50748	NIPPLE, 2” TOE
33	6	50724	STUD, MOUNTING
34	6	25706	NUT

If your FE-145 requires major repair, or to achieve pressures up to 40,000 psi

UPGRADE TO JETSTREAM’S UNx FLUID END

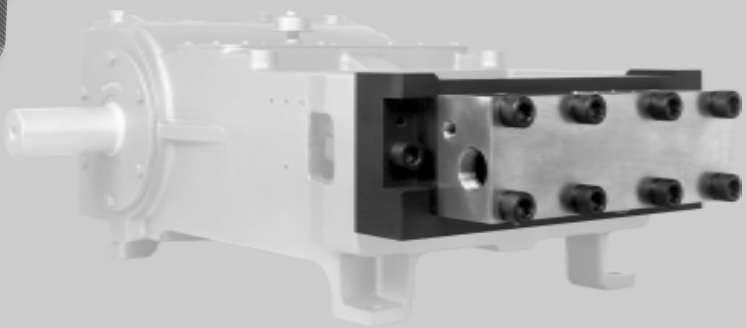

THE SIMPLE UNx

- 63% fewer parts than the FE-145
- One piece of brass
- One packing ring
- One valve
- No fluid cylinder to crack
- No racetrack seals to blow
- Cuts your pump’s downtime and repair costs
- No special tools needed
- Utilizes cartridge-style overhaul
- In-line valve design

TD-60 & QD-100 10,000 PSI PUMP FLUID END

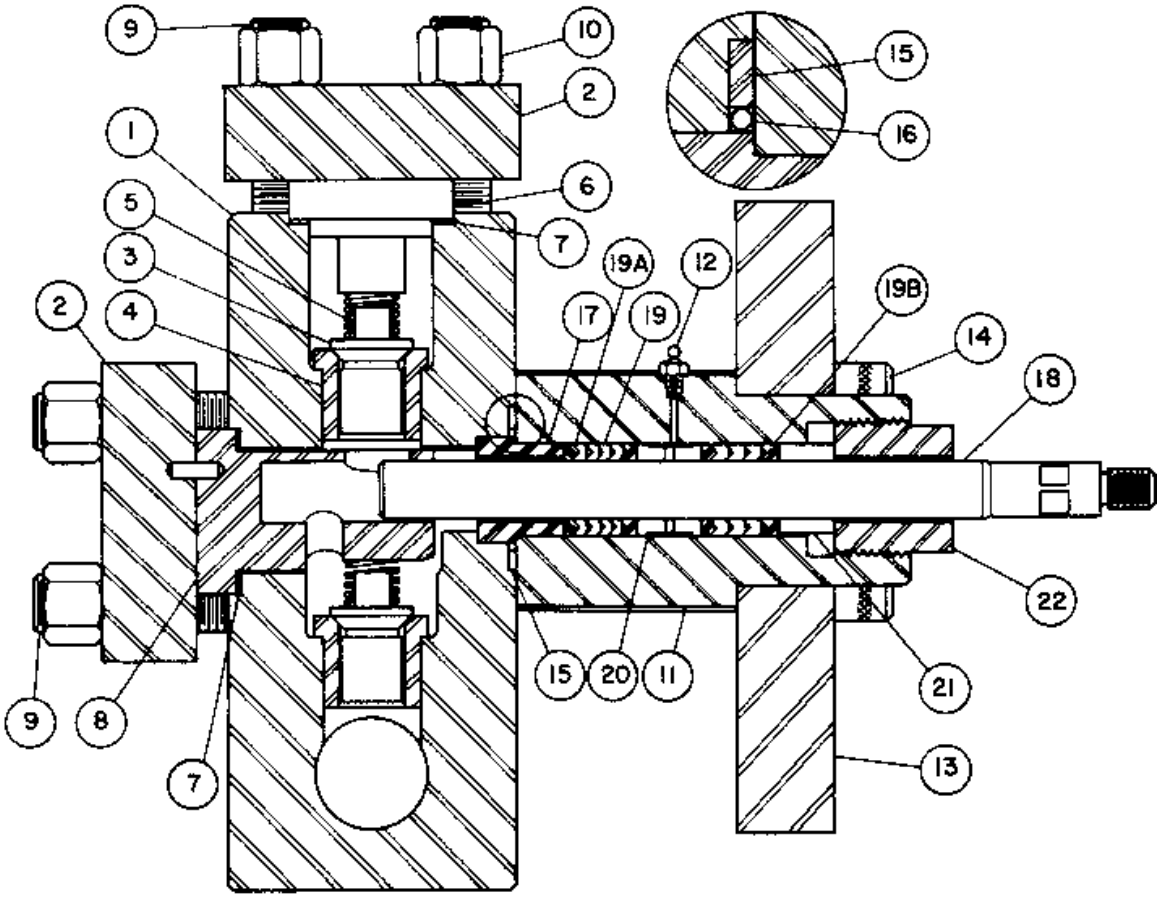

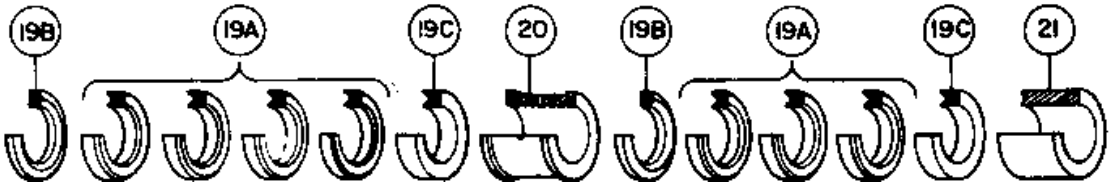

ITEM	TD-60 TRIPLEX PART NO.	QD-100 QUINTUPLEX PART NO.	DESCRIPTION
1	25564	25565	FLUID CYLINDER
2	50578	50578	COVER
3	50580	50580	VALVE, SUCTION OR DISCHARGE
4	50581	50581	SEAT, SUCTION OR DISCHARGE
5	25505	25505	SPRING, VALVE
6	50543	50582	STOP, DISCHARGE VALVE
7	25521	25521	GASKET, COVER, COPPER
8	50544	50544	EXTENSION, CYLINDER HEAD
9	25863	25863	STUD
10	25864	25864	NUT
11	50578A	50578A	STUFFING BOX, 1-3/8” I.D.
12	25561	25561	ZERK, GREASE, HIGH PRESSURE
13	25569	25567	FLANGE, STUFFING BOX
15	50534	50534	GASKET, STUFFING BOX
16	25566	25566	O-RING, STUFFING BOX GASKET
17	50542	50542	THROAT BUSHING, 1-5/8” x 1-3/8”
18	50527	50527	PLUNGER, 3/4” DIAMETER JETALLOY
	50526	50526	PLUNGER, 7/8” DIAMETER JETALLOY

ITEM	TD-60 TRIPLEX PART NO.	QD-100 QUINTUPLEX PART NO.	DESCRIPTION
19	50508	50508	PACKING SET, 3/4” x 1-3/8” WITH ADAPTERS
	50501	50501	PACKING SET, 7/8” x 1-3/8” WITH ADAPTERS
19A	50503	50503	PACKING SET, 3/4” x 1-3/8” WITHOUT ADAPTERS
	50502	50502	PACKING SET, 7/8” x 1-3/8” WITHOUT ADAPTERS
19B	50507	50507	ADAPTER, 3/4” x 1-3/8” MALE
	50505	50505	ADAPTER, 7/8” x 1-3/8” MALE
19C	50506	50506	ADAPTER, 3/4” x 1-3/8” FEMALE
	50504	50504	ADAPTER, 7/8” x 1-3/8” FEMALE
20	50531	50531	LANTERN RING, 3/4” x 1-3/8”
	50530	50530	LANTERN RING, 7/8” x 1-3/8”
21	50533	50533	GLAND FOLLOWER, 3/4” x 1-3/8”
	50532	50532	GLAND FOLLOWER, 7/8” x 1-3/8”
22	50646	50646	GLAND

If your TD-60 or QD-100 requires major repair, or to achieve pressures up to 40,000 psi

UPGRADE TO JETSTREAM’S UNx FLUID END

THE SIMPLE UNx

- 67% fewer parts than the TD-60
- 55% fewer parts than the QD-100
- One piece of brass
- One packing ring
- One valve
- No fluid cylinder to crack
- Cuts your pump’s downtime and repair costs
- No special tools needed
- Utilizes cartridge-style overhaul
- In-line valve design

TD-60 & QD-100 7,000 PSI PUMP FLUID END

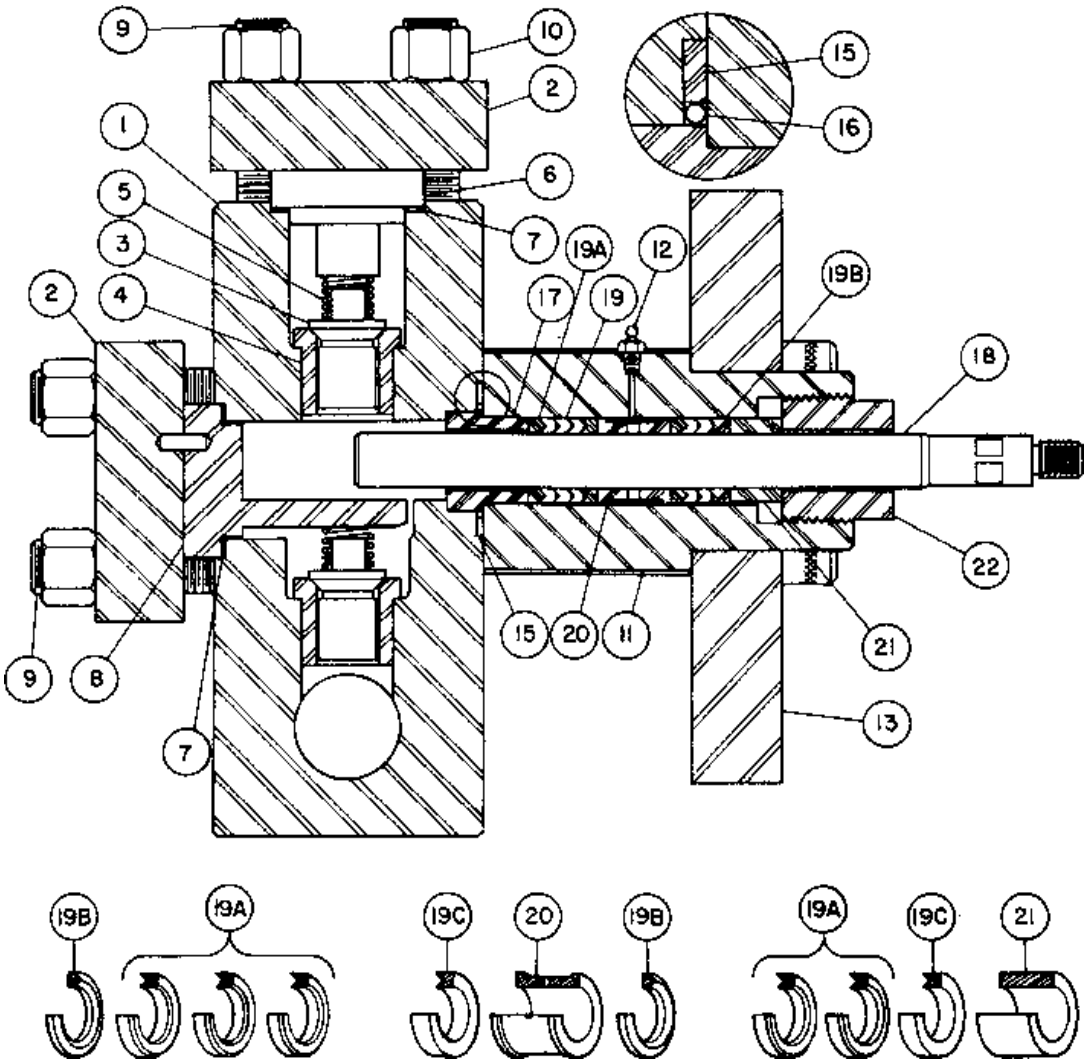

ITEM	TD-60 TRIPLEX PART NO.	QD-100 QUINTUPLEX PART NO.	DESCRIPTION
1	25564	25565	FLUID CYLINDER
2	50577	50577	COVER
3	50580	50580	VALVE, SUCTION OR DISCHARGE
4	50581	50581	SEAT, SUCTION OR DISCHARGE
5	25505	25505	SPRING, VALVE
6	50543	50582	STOP, DISCHARGE VALVE
7	25521	25521	GASKET, COVER, COPPER
8	50583	50583	EXTENSION, CYLINDER HEAD
9	25862	25862	STUD
10	25706	25706	NUT
11	50579	50579	STUFFING BOX, 1-5/8” I.D.
12	25561	25561	ZERK, GREASE, HIGH PRESSURE
13	25569	25567	FLANGE, STUFFING BOX
15	50534	50534	GASKET, STUFFING BOX
16	25566	25566	O-RING, STUFFING BOX GASKET
17	50584	50584	THROAT BUSHING, 1-5/8” x 1-5/8”
18	50526	50526	PLUNGER, 7/8” DIAMETER JETALLOY
	50676	50676	PLUNGER, 1” DIAMETER JETALLOY

ITEM	TD-60 TRIPLEX PART NO.	QD-100 QUINTUPLEX PART NO.	DESCRIPTION
19	50653 50538	50653 50538	PACKING SET, 7/8” x 1-5/8” WITH ADAPTERS PACKING SET, 1” x 1-5/8” WITH ADAPTERS
19A	50652 50706	50652 50706	PACKING SET, 7/8” x 1-5/8” WITHOUT ADAPTERS PACKING SET, 1” x 1-5/8” WITHOUT ADAPTERS
19B	50524 50516	50524 50516	ADAPTER, 7/8” x 1-5/8” MALE ADAPTER, 1” x 1-5/8” MALE
19C	50525 50515	50525 50515	ADAPTER, 7/8” x 1-5/8” FEMALE ADAPTER, 1” x 1-5/8” FEMALE
20	50528 50790	50528 50790	LANTERN RING, 7/8” x 1-5/8” LANTERN RING, 1” x 1-5/8”
21	50529 50846	50529 50846	GLAND FOLLOWER, 7/8” x 1-5/8” GLAND FOLLOWER, 1” x 1-5/8”
22	50646	50646	GLAND

If your TD-60 or QD-100 requires major repair, or to achieve pressures up to 40,000 psi

UPGRADE TO JETSTREAM’S UNx FLUID END

THE SIMPLE UNx

- **67% fewer parts than the TD-60**
- **55% fewer parts than the QD-100**
- **One piece of brass**
- **One packing ring**
- **One valve**
- **No fluid cylinder to crack**
- **Cuts your pump’s downtime and repair costs**
- **No special tools needed**
- **Utilizes cartridge-style overhaul**
- **In-line valve design**

TD-60 TRIPLEX PUMP POWER END

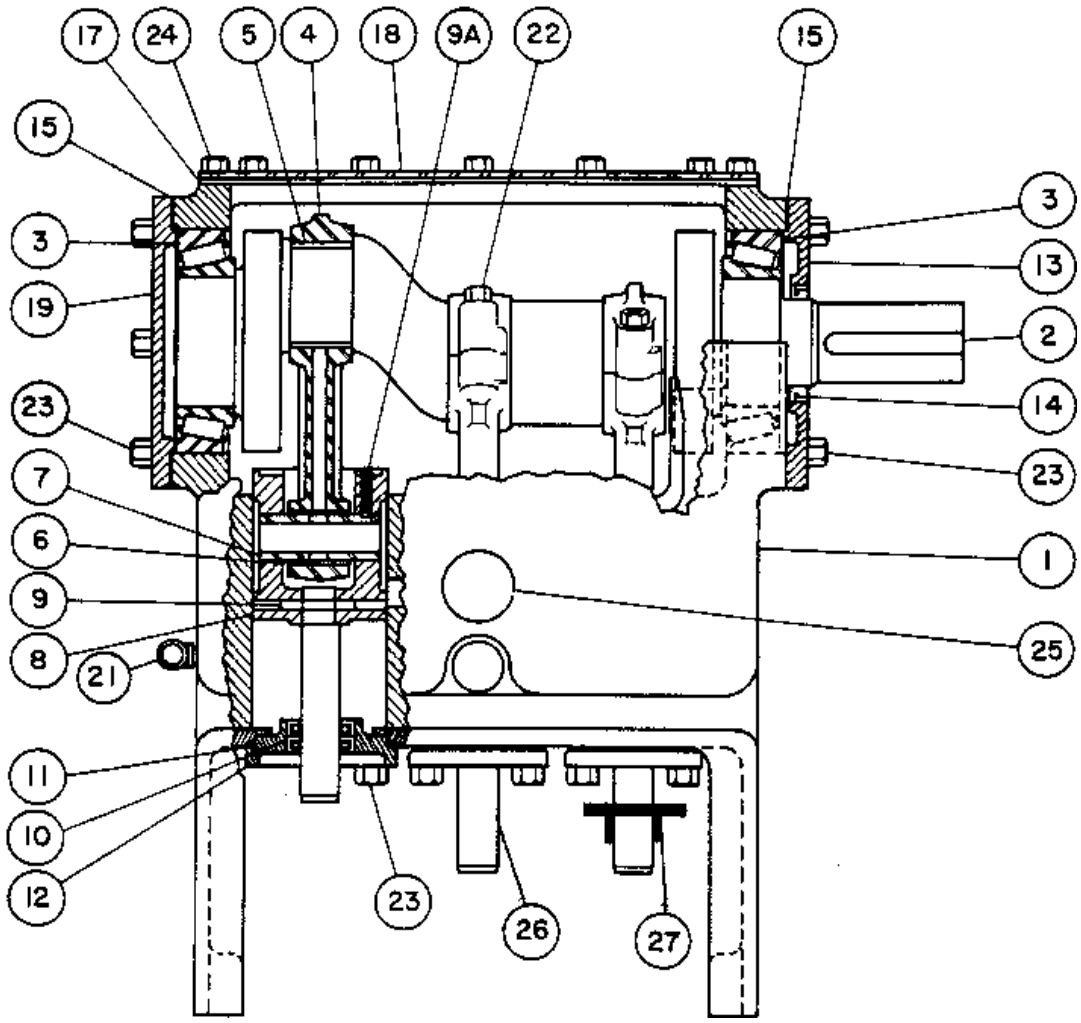

ITEM	QTY	JETSTREAM IMPROVED™ PART NO.	DESCRIPTION
1	1	25526	POWER FRAME
2	1	25532	CRANKSHAFT
3	2	25541	BEARING, CRANKSHAFT MAIN
4	3	25538	CONNECTING ROD ASSEMBLY WITH CROSSHEAD PIN BEARING
5	3	25542	BEARING, CONNECTING ROD, STANDARD SIZE
6	3	25537	BEARING, CROSSHEAD PIN
7	3	25535	PIN, CROSSHEAD
8	3	25527	CROSSHEAD
9	3	25545	PIN, DOWEL
9A	6	25132	SETSCREW
10	6	25536	SEAL, CROSSHEAD STUB
11	3	25546	GASKET, CROSSHEAD STUB SEAL CAP
12	3	25549	CAP, CROSSHEAD STUB SEAL
13	1	25554	CAP, FRAME, INBOARD
14	1	25553	SEAL, CRANKSHAFT OIL
15	A/R	25558	SHIM, .020” THICK
		25558-1	SHIM, .010” THICK
		25558-2	SHIM, .0075” THICK
		25558-3	SHIM, .005” THICK

ITEM	QTY	JETSTREAM IMPROVED™ PART NO.	DESCRIPTION
17	1	25550	GASKET, CRANKCASE COVER
18	1	25547	COVER, CRANKCASE
19	1	25556	CAP, FRAME, OUTBOARD
21	1	25783	CUP, OIL LEVEL GAUGE
22	6	25770	BOLT, CONNECTING ROD
23	18	COMM	BOLT, 1/2”-13 UNC x 1-1/2” LG.
24		COMM	BOLT, 3/8”-16 UNC x 1/2” LG.
25	1	25746	BREATHER, CRANKCASE
26	3	50696	CROSSHEAD STUB
27	3	50031	DEFLECTOR

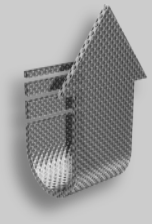

If your FE-85 or TD-60 requires major repair, or to achieve pressures up to 40,000 psi

UPGRADE TO JETSTREAM’S 3000 SERIES BARESHAFT PUMP

BENEFIT FROM ITS HIGHER HORSEPOWER RATING AND STATE-OF-THE-ART UNx FLUID END.

- **125 Horsepower rated**
- **UNx Fluid End with cartridge-style repair will reduce pump downtime**
- **Larger journal bearings**
- **Stronger Ductile Iron power frame**
- **Heavy-duty forged crankshaft**

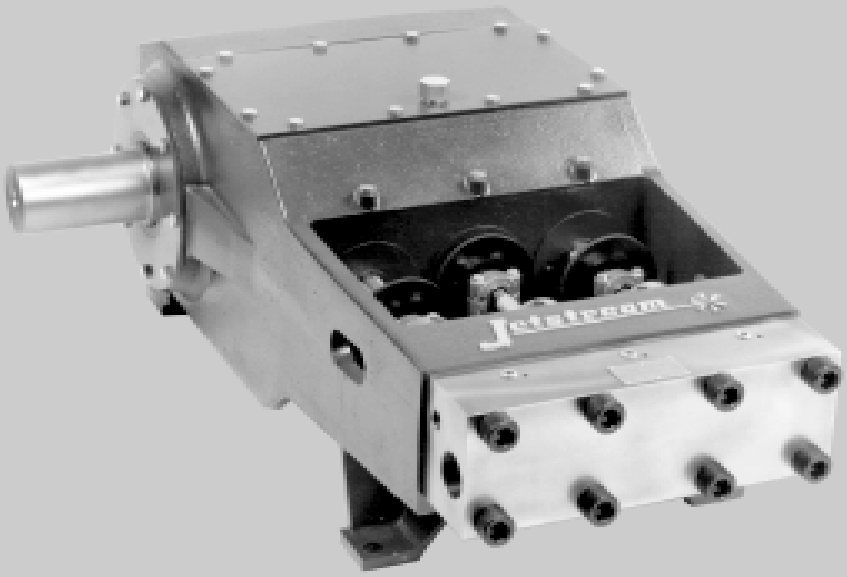

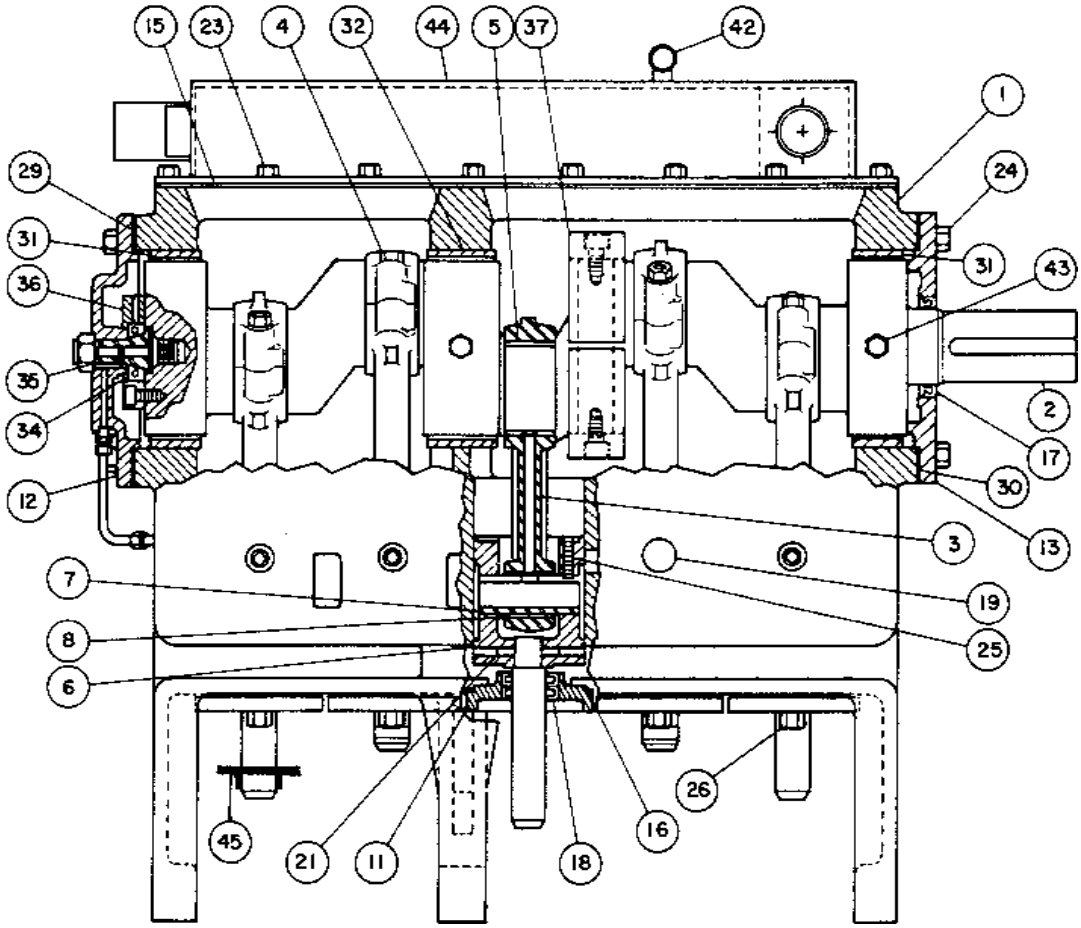

ITEM	QTY	JETSTREAM IMPROVED™ PART NO.	DESCRIPTION
1	1	50758	POWER FRAME
2	1	25534	CRANKSHAFT
3	5	25538	CONNECTING ROD
4	10	25770	BOLT, CONNECTING ROD
5	5	25542	BEARING, CONNECTING ROD, STANDARD SIZE
6	5	25527	CROSSHEAD
7	5	25535	PIN, CROSSHEAD
8	5	25537	BEARING, CROSSHEAD PIN
11	5	25549	CAP, CROSSHEAD STUB SEAL
12	1	25557	CAP, FRAME, OUTBOARD
13	1	25555	CAP, FRAME, INBOARD
15	1	2551	GASKET, CRANKCASE COVER
16	5	25546	GASKET, CROSSHEAD STUB SEAL CAP
17	1	25553	SEAL, CRANKSHAFT OIL
18	10	25536	SEAL, CROSSHEAD STUB
19	1	25746	BREATHER, CRANKCASE
21	5	25545	PIN, DOWEL
23	14	COMM	CAPSCREW, 3/8”-16 UNC x 1/2” LG.
24	12	COMM	CAPSCREW, 1/2”-13 UNC x 1-1/2” LG.
25	10	25132	SETSCREW

ITEM	QTY	JETSTREAM IMPROVED™ PART NO.	DESCRIPTION
26	10	COMM	CAPSCREW, 1/2”-13 UNC x 2” LG.
29	A/R	25559	SHIM, .020” THICK
30	1	25669	SHIM, .0075” THICK
31	2	25539	BEARING, CRANKSHAFT END, STANDARD SIZE
		50931	BEARING, CRANKSHAFT END, .040” UNDERSIZE
32	1	25540	BEARING, CRANKSHAFT CENTER, STANDARD SIZE
		50932	BEARING, CRANKSHAFT CENTER, .040” UNDERSIZE
34	1	25530	BEARING, THRUST
35	1	50934	STUD, THRUST BEARING
36	1	50935	RETAINER, THRUST BEARING
37	1	50840	RING, OIL
38	1	50741	SKIMMER, OIL, REVERSE (NOT SHOWN)
39	1	25751	COVER, TOP CRANKCASE (NOT SHOWN)
40	1	25668	GASKET, TOP CRANKCASE COVER (NOT SHOWN)
42	1	25783	CUP, OIL LEVEL GAUGE
43	3	COMM	CAPSCREW, 1/2”-13 UNC x 3” LG.
44	1	50757	COOLER, POWER END OIL
45	5	50031	DEFLECTOR

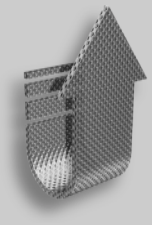

If your FE-145 or QD-100 requires major repair, or to achieve pressures up to 40,000 psi

UPGRADE TO JETSTREAM’S 4200 SERIES BARESHAFT PUMP

BENEFIT FROM ITS HIGHER HORSEPOWER RATING AND STATE-OF-THE-ART UNx FLUID END.

- **250 Horsepower rated**
- **UNx Fluid End with cartridge-style repair will reduce pump downtime**
- **Larger journal bearings**
- **Stronger Ductile Iron power frame**
- **Heavy-duty forged crankshaft**

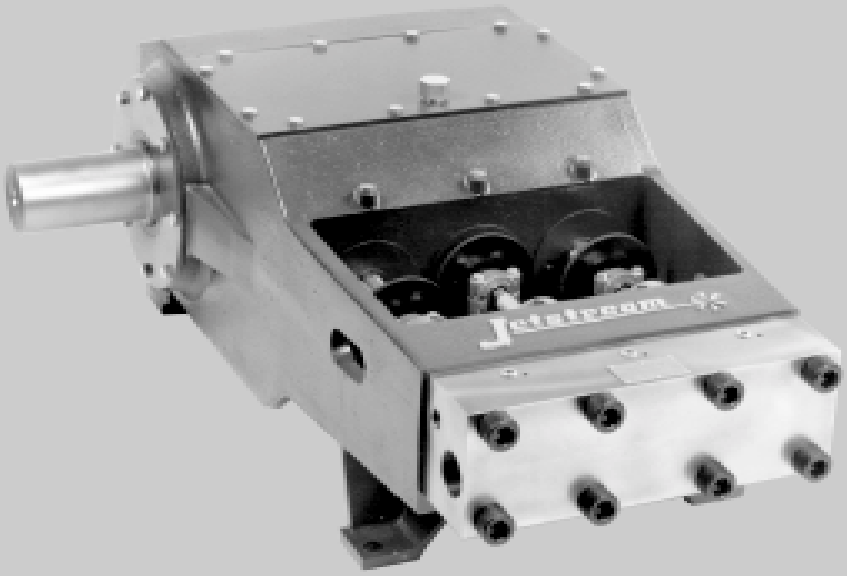

P10ME CONTROL GUN

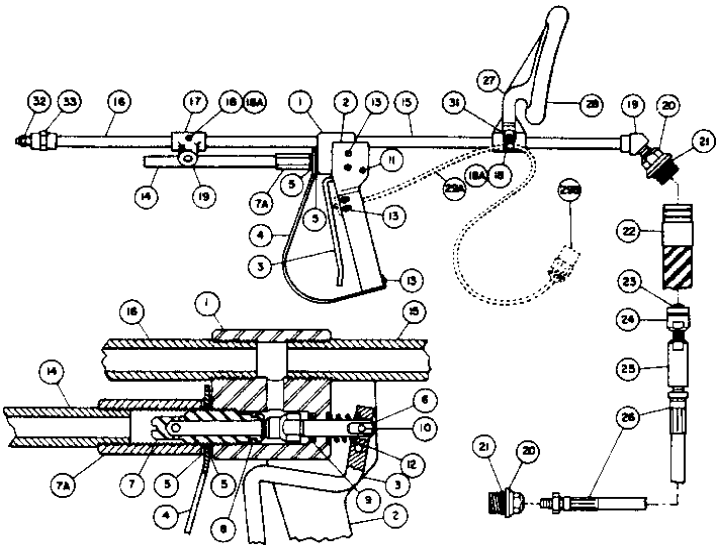

ITEM	QTY	JETSTREAM IMPROVED™ PART NO.	DESCRIPTION	ITEM	QTY	JETSTREAM IMPROVED™ PART NO.	DESCRIPTION
1	1	50759	BODY	21	1	25657	O-RING
2	1	50761	HANDLE	22	1	50796	SHROUD, SAFETY
3	1	50762	TRIGGER	23	1	50698	SEAL
4	1	50760	GUARD	24	1	50712	COUPLING HALF, FEMALE
5**	2	50775	WASHER, NYLON	25	1	50743	ADAPTER, SAFETY SHROUD
6*	1	50700	VALVE	26	1	25581	HOSE, SAFETY WHIP, 1/2” I.D. x 6 FT.
7*	1	50699	SEAT				
7A	1	50701	DISCHARGE PIECE	27	1	51127	ASSY., SHOULDER STOCK
8**	1	25696	O-RING	28	1	25692	CUSHION, SHOULDER STOCK
9**	1	25676	SEAL, TEFLON	29	1	50996	SWITCH ASSY., W/ TWISTLOCK CONNECTOR
10	1	25754	PIN, DOWEL				
11	1	25755	SCREW, TRIGGER PIVOT	29A	1	50997	SWITCH ASSY., W/O TWISTLOCK CONNECTOR
12	1	25753	SPRING				
13	5	25782	CAPSCREW, BUTTON HD.	29B	1	25629	CONNECTOR, TWISTLOCK FEMALE
14	1	50002	NIPPLE, DISCHARGE				
15	1	50739	NIPPLE, 14” LG.	31	1	50998	CLIP, WIRE CORD
16	1	50065	NIPPLE, 48” LG.	32	1	SPECIFY	NOZZLE
17	1	51132	ASSY., HAND GRIP	33	1	50342	COUPLING, 1/4” x 1/2”
20	1	50711	COUPLING HALF, MALE				

* ORDER AS VALVE AND SEAT KIT, P/N: 50764

** ORDER AS SEAL KIT, P/N: 50763

UPGRADE TO JETSTREAM’S DURASAFE CONTROL GUN

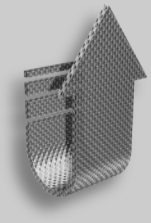

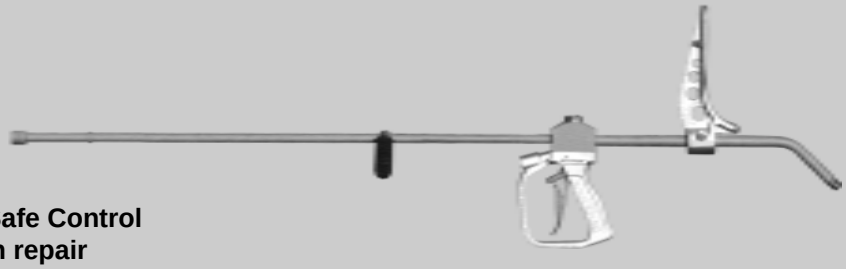

Upgrading to a Jetstream DuraSafe Control Gun will drastically cut your gun repair downtime and will provide your operator with superior comfort and safety. The DuraSafe Series is the waterblast industry’s most popular control gun!

- **Fully adjustable, comfortable body pad**
- **Improved, advanced safety features**
- **30 second cartridge-style field repair**
- **15,000 and 20,000 psi models**

SAF-TROL E POWER UNIT

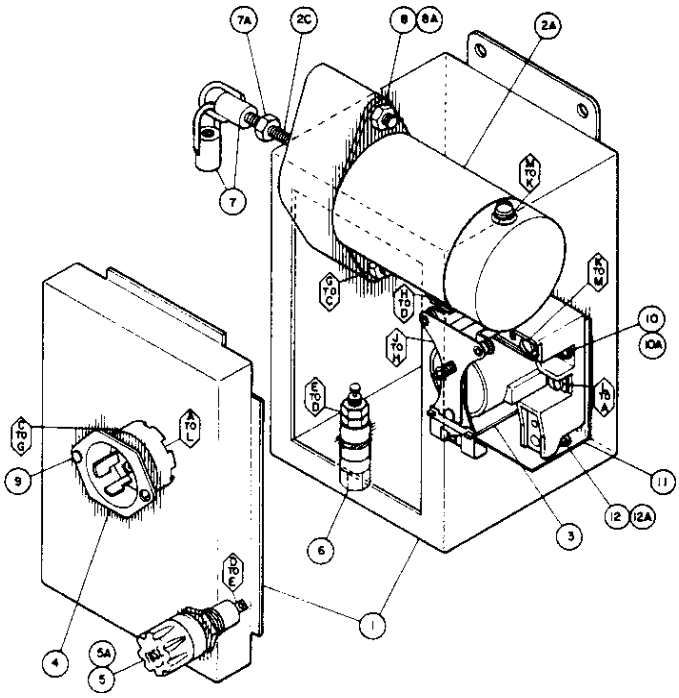

ITEM	QTY	JETSTREAM IMPROVED™ PART NO.	DESCRIPTION	ITEM	QTY	JETSTREAM IMPROVED™ PART NO.	DESCRIPTION
	1	50797	ASSEMBLY	8A	2	COMM	NUT, 5/16”-UNC
1	1	50793	BOX, ELECTRICAL, 6” x 4” x 4”	9	2	COMM	RIVET, POP, 1/8”
2	1	50779	SOLENOID ASSY.	10	2	COMM	SCREW, #10-24 x 5/8” LG.
2A	1	25961	SOLENOID COIL,	10A	2	COMM	NUT, #10-24
			REPLACEMENT	11	1	50810	BRACKET, RELAY
2C	1	50778	PLUNGER, SOLENOID	12	2	COMM	SCREW, #6-32 x 1/2” LG.
3	1	25631	RELAY	12A	2	COMM	NUT, #6-32
4	1	25762	RECEPTACLE, TWIST-LOCK		1	COMM	WIRE, A TO L, 14 GA. x 7”
5	1	25644	HOLDER, FUSE		1	COMM	WIRE, C TO G, 14 GA. x 12”
5A	1	25632	FUSE, 10 AMP SLO-BLO		1	COMM	WIRE, D TO E, 12 GA. x 9”
6	1	25679	POST, ELECTRICAL TERMINAL		1	COMM	WIRE, H TO D, 12 GA. x 11”
7	1	25758	LINK		1	COMM	WIRE, J TO H, 14 GA. x 4”
7A	1	COMM	NUT, 1/4”-20 UNC		1	COMM	WIRE, K TO M, 12 GA. x 4-1/2”
8	2	COMM	BOLT, 5/16”-UNC x 2-1/2” LG.				

UPGRADE TO JETSTREAM’S HYDRO THROTTLE

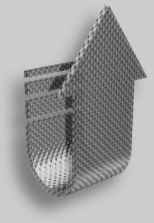

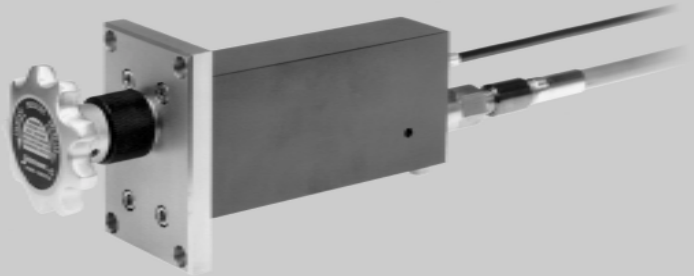

- **Eliminate the need for Saf-Trol E Power Unit and Electric Guns**
- **3 minute cartridge-style field repair**
- **Fast down-throttle adjustment for greater safety**
- **Requires only light hand force to set engine speed**
- **No difficult adjustments**
- **10,000, 15,000 and 20,000 psi models**

MANUAL DUMP VALVE

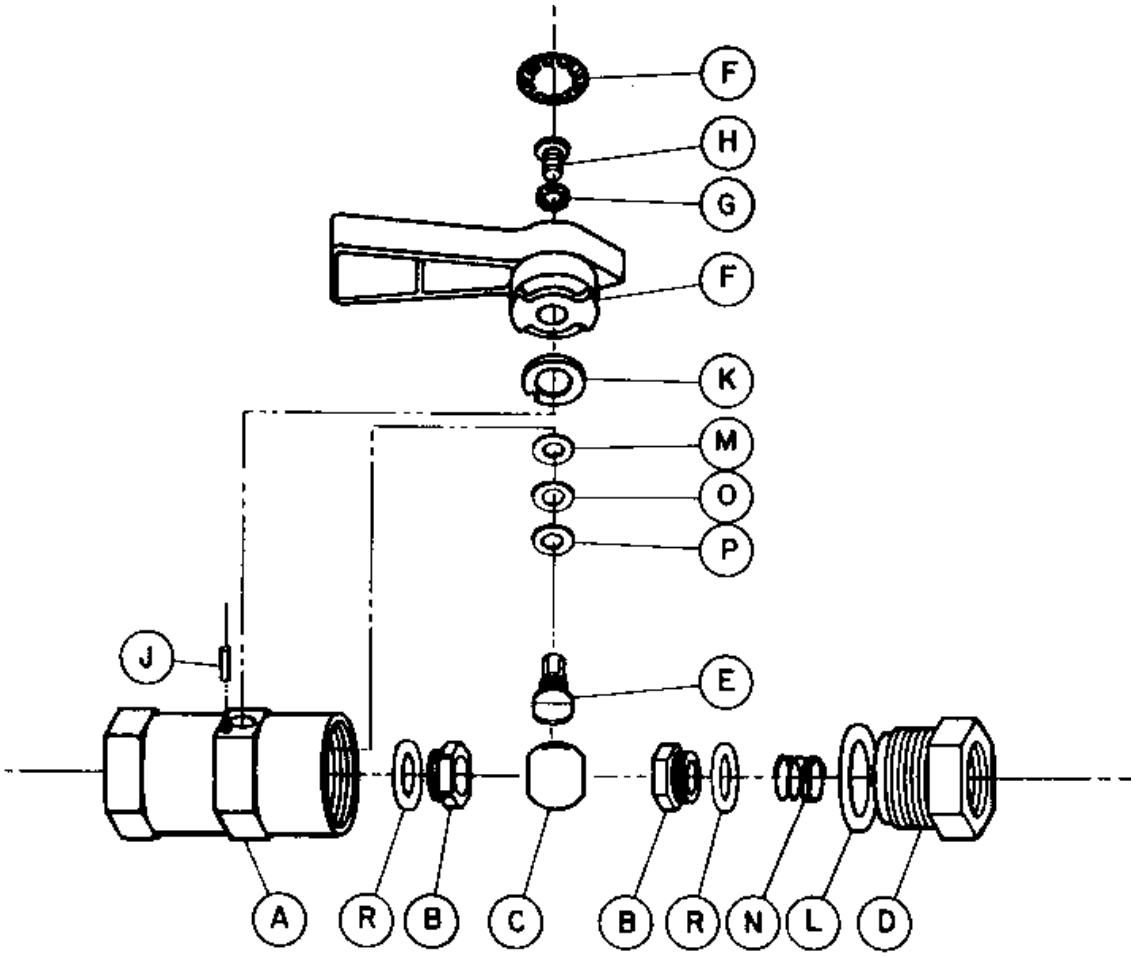

ITEM	QTY	JETSTREAM IMPROVED™ PART NO.	DESCRIPTION
		50545	ASSEMBLY
A	1	50735	BODY
B**	2	25522	SEAT
C*	1	25524	BALL
D	1	50740	END CAP
E*	1	25523	STEM
F	1	25518	HANDLE WITH CAP
G	1	26753	STAR WASHER
H	1	26752	MACHINE SCREW, ROUND HD.
J	1	25716	STOP PIN
K*	1	25519	WASHER, TEFLON
L**	1	25715	O-RING
M*	1	25713	O-RING
N**	1	25666	SPRING
O*	1	25664	WASHER, FIBER
P*	1	25665	WASHER, STEEL
R**	2	25714	O-RING

* ORDER AS STEMS & BALL KIT, P/N: 50611 ** ORDER AS SEAT & SEAL KIT, P/N: 50610

SNAP ACTING RELIEF VALVE

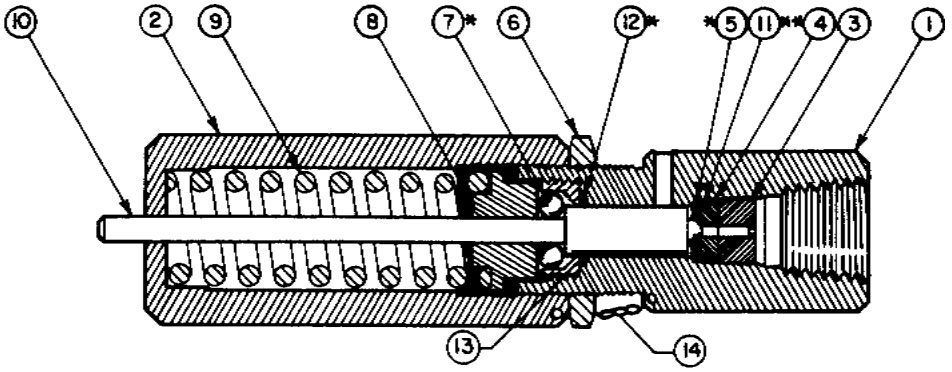

ITEM	QTY	JETSTREAM IMPROVED™ PART NO.	JETSTREAM IMPROVED™ PART NO.	DESCRIPTION
		50813		VALVE ASSY., RELIEF (9,100 TO 12,000 PSI)
			50921	VALVE ASSY., RELIEF (4,000 TO 9,000 PSI)
1	1	50782	50782	BODY
2	1	50768	50920	BONNET
3	1	50709	50709	SEAT RETAINER PLUG
4*	1	50548	50548	SEAT
5*	1	50619	50619	SEAT RETAINER
6	1	50769	50769	LOCKNUT
7*	6	25661	25661	STAINLESS BALL
8	1	50719	50719	BALL RETAINER
10	1	50727	50710	PLUNGER ASSEMBLY
11*	1	25696	25696	O-RING
12*	1	25601	25601	O-RING
13	1	50708	50708	BODY INSERT
14	1	25752	25752	SAFETY SEAL WIRE

* ORDER AS SEAT REPAIR KIT, P/N: 50547

UPGRADE TO JETSTREAM'S SEVERE SERVICE RELIEF VALVE

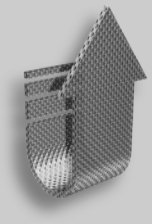

Upgrading to a Jetstream Severe Service Relief Valve for longer service life, fewer parts and simple cartridge-style repair.

- **Only 7 parts**
- **Tougher ball / seat materials. Tungsten carbide available**
- **Quick and easy cartridge-style field repair**
- **Pressures up to 20,000 psi**

WBD 70-90, WBD 150, & WBD 190V PUMP DRIVE

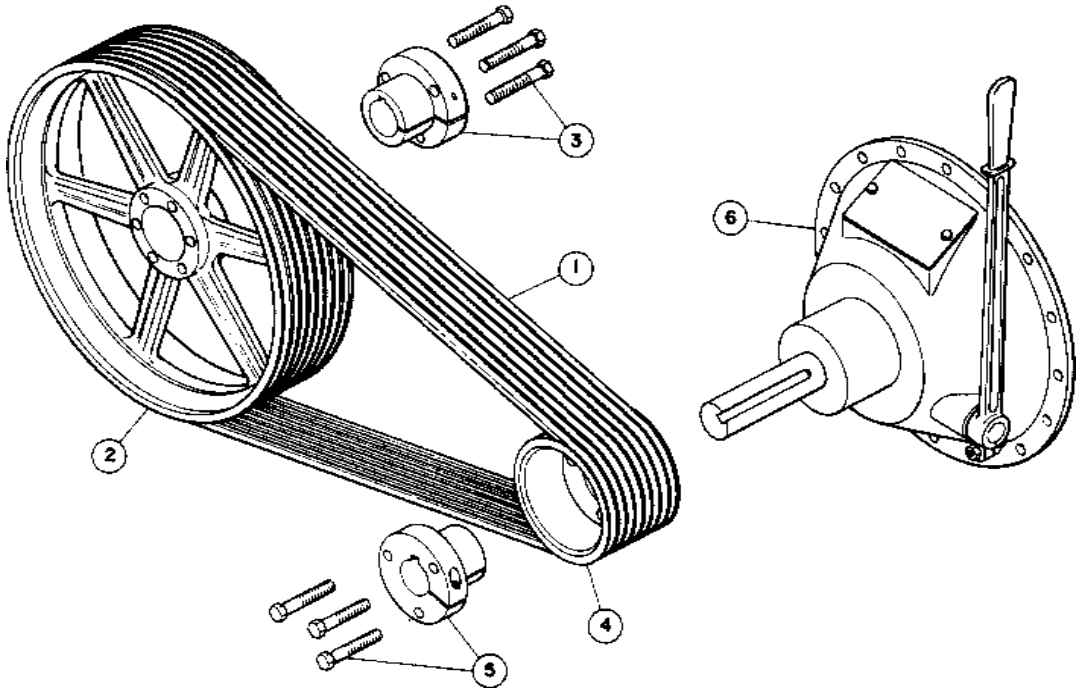

ITEM	QTY	JETSTREAM IMPROVED™ PART NO.	DESCRIPTION
WBD 70-90 PUMP DRIVE			
1	8	25800	BELT, V, 3V 710
2	1	25141	SHEAVE, PUMP, 19.00” O.D.
3	1	25143	BUSHING, SHEAVE, 2.50” I.D.
4	1	25142	SHEAVE, ENGINE, 4.75” O.D.
5	1	25144	BUSHING, SHEAVE, 2.25” I.D.
6	1	25140	POWER TAKEOFF ASSEMBLY
WBD 70-90 PUMP DRIVE			
1	8	25773	BELT, V, 5V 1250
2	1	25764	SHEAVE, PUMP, 28.00” O.D.
3	1	25759	BUSHING, SHEAVE, 2.75” I.D.
4	1	25763	SHEAVE, ENGINE, 7.50” O.D.
5	1	25760	BUSHING, SHEAVE, 2.25” I.D.
6	1	25917	POWER TAKEOFF ASSEMBLY
WBD 70-90 PUMP DRIVE			
1	8	25137	BELT, V, 5V 1060
2	1	25764	SHEAVE, PUMP, 28.00” O.D.
3	1	25759	BUSHING, SHEAVE, 2.75” I.D.
4	1	25138	SHEAVE, ENGINE, 7.10” O.D.
5	1	25760	BUSHING, SHEAVE, 2.25” I.D.
6	1	25139	POWER TAKEOFF ASSEMBLY

HOSE QUICK DISCONNECT COUPLING

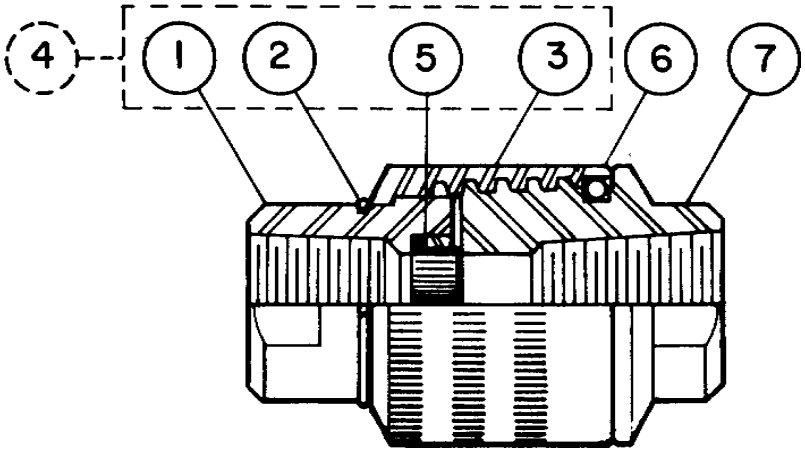

ITEM	QTY	JETSTREAM IMPROVED™ PART NO.	JETSTREAM IMPROVED™ PART NO.	DESCRIPTION
		50733		PLATED STEEL ASSEMBLY
			50001	STAINLESS STEEL ASSEMBLY
1	1	50712	50556	COUPLING HALF, FEMALE
2	1	25690	25690	RING, RETAINER
3	1	50713	50006	NUT
4	1	50756	50729	COUPLING HALF, FEMALE ASSY.
5	1	50698	50698	SEAL, MOLDED
6	1	25657	25657	O-RING, THREAD LOCK
7	1	50711	50009	COUPLING HALF, MALE

UPGRADE TO JETSTREAM'S TWISLOK™ COUPLING

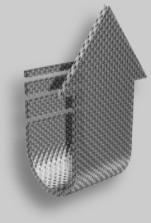

Switch to the toughest quick-connect hose coupling on the market.

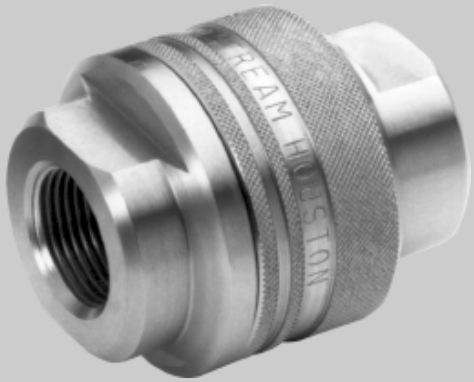

- **Acme threads withstand the roughest field treatment**
- **Heavy-duty cartridge-style seal**
- **Seal surface protected when disconnected**
- **3/8", 1/2" 3/4" and 1" NPT**
- **10,000 and 15,000 psi rated**
- **Stainless steel**

JETSTREAM NO-BLO™ (RUBBER) WATERBLAST HOSE

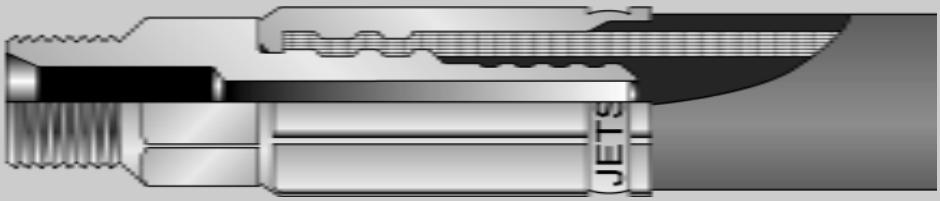

Do not risk serious operator injury from an end fitting blowing off. Use Jetstream NO-BLO™ waterblast hose.

- **NO-BLO™ end fittings that will not blow off, for maximum safety**
- **Operating pressures to 20,000 psi with burst pressures to 50,000 psi**
- **Sizes 1/4" to 1" I.D.**

JETSTREAM MANUFACTURES A COMPLETE LINE OF REPLACEMENT PARTS FOR ALL PUMPS

Jetstream understands how critical time is in the waterblast industry. Because of this, Jetstream ships 98% of all orders the same day received. Our Application Specialists and Shipping Personnel are knowledgeable and know the fastest, most cost-effective way to get the products to the customer when they need them.

JETSTREAM'S AROUND-THE-CLOCK MANUFACTURING FACILITY.

Jetstream is a major manufacturer of waterblast systems, pumps, accessories and replacement parts.

Jetstream has been manufacturing waterblast products for over 20 years and has earned a reputation of producing quality products. All parts are machined on CNC (Computer Numerical Controlled) machines resulting in superior accuracy — every single time. Our shop runs 24 hours around-the-clock to ensure stock on parts when our customers need them.

Jetstream's engineers review parts designs and make improvements to materials and tolerances to give you the best product possible. All products are evaluated at our test facility to ensure they meet Jetstream's high, stringent standards.

SERVICE SECOND TO NONE

Service means helping the customer find the right products for the job, making sure they have everything they need and getting products to them when they need them.

Jetstream's trained Application Specialists are here to help the customer find solutions, not to just sell products. Whether they need help troubleshooting a pump problem or deciding on the right cleaning equipment for that upcoming job, our Application Specialists are here to serve.

Jetstream manufactures and stocks all parts in-house, giving us total control over inventory. Jetstream also ships 98% of orders out the very same day they are received — so **every waterblast part and accessory is available when you need it!**

Jetstream of Houston, Inc.
4930 Cranswick
Houston, TX 77041

PO Box 79228
Houston, TX 77279

Jetstream of Houston, Inc.
FAX: 713-462-5387

Visit our web site at:
web: www.waterblast.com
eMail: sales@waterblast.com

Jetstream of Houston welcomes the American Express® Card, VISA® and MasterCard®

AMERICAN EXPRESS Cards VISA® MasterCard®

1-800-231-8192 • (713) 462-7000